GoonQuad: an Emotive Quadruped for Exploring Human-Robot Interaction

Lauren Abramsky
School of Computing
Queen's University
Kingston, Ontario, Canada
lauren.abramsky@queensu.ca

Paul Strohmeier
Human Media Lab
Queen's University
Kingston, Ontario, Canada
paul@cs.queensu.ca

Antonio Gomes
Human Media Lab
Queen's University
Kingston, Ontario, Canada
gomes@cs.queensu.ca

Roel Vertegaal
Human Media Lab
Queen's University
Kingston, Ontario, Canada
roel@cs.queensu.ca

Figure 1. GoonQuad Emotive Quadruped

Permission to make digital or hard copies of part or all of this work for personal or classroom use is granted without fee provided that copies are not made or distributed for profit or commercial advantage and that copies bear this notice and the full citation on the first page. Copyrights for third-party components of this work must be honored. For all other uses, contact the Owner/Author. Copyright is held by the owner/author(s). ACE '14, Nov 11-14 2014, Funchal, Portugal. ACM 978-1-4503-2945-3/14/11. http://dx.doi.org/10.1145/2663806.2663819

Abstract
We present GoonQuad, an emotive quadruped capable of expressing emotional behaviours as a response to human touch. GoonQuad comprises five prerecorded states: angry, cheerful, sleepy, confused and a baseline breathing state. Each state is triggered by human touch in areas specified by the eyebrows and a tattoo, painted with conductive ink. Moreover, GoonQuad is capable of recording and replaying movements via direct user manipulation. To enable the robot to record and replay new motions, analog feedback servos were embedded in the 3D printed structure. Our aim was to develop a system where users can interact with a robot naturally and the robot can adapt to this natural interaction.

Author Keywords
Interactive Art; Robotics; Emotional Interfaces; Human-Robot Interaction; Prototyping.

ACM Classification Keywords
H5.2. [User Interfaces] Direct Manipulation. H5.m. Information interfaces and presentation (e.g. HCI): Miscellaneous. J.5 Arts and humanities: Arts, fine and performing.

Introduction

Touch is an important form of communication or interaction between robots and humans [3]. Expressing, recognizing, and understanding emotions is essential in human interaction. Emotions can influence both motivational and conversational content [1]. One can expect the same to be true for human-robot interaction as social expressions produced by robots are processed in a similar manner as signals produced by humans. Artificial emotions enable robots to react to their surroundings in a believable and natural manner [2]. Furthermore, artificial emotions can be leveraged as control mechanisms [3] as well as provide feedback regarding the robots' internal states or goals.

Socially interactive robots are used for various purposes, i.e. as toys, as educational tools, or as research platforms [4]. This purpose has a strong influence on how the emotion display is designed, i.e., when a robot acts as a playing partner for a memory game its emotional reactions have an impact on the human players. This requires more complex processing than solely react to what is perceived [5]. Some robots are quite limited in displaying emotion, e.g., using actuated lips or flashing LEDs [6,7]. Others have many degrees of freedom and can provide richer movement [3,8]. Our goal was to create a robot aimed at exploring the trade-off between complexity and playfulness, providing users with an engaging robotic exploration capable of expressing emotions in response to human interaction. Our aim was to develop a system where users can interact with a robot naturally and the robot can adapt to this natural interaction.

Related Work

Our design was inspired by prior explorations of emotive robots, and their use of technology to create natural and believable life-like movements. Researchers have commonly used facial expressions [12], body movements [10], color [9] and posture [11] as a way to express robotic emotions. The discreteness and continuity of transitions between movements, posture or orientation are powerful agents to convey affective states. We borrowed from the aforementioned explorations in the development of GoonQuad: a quadruped robot capable of detecting and responding to human touch.

Implementation

The main structure of our robot was 3D printed in various segments that we have released as open source (Figure 2) [13]. The underlying technology of our robot, comprises 8x Analog Feedback Servos (Figure 3), an Arduino microcontroller and capacitive touch sensors that enable our robot to detect human touch. We used

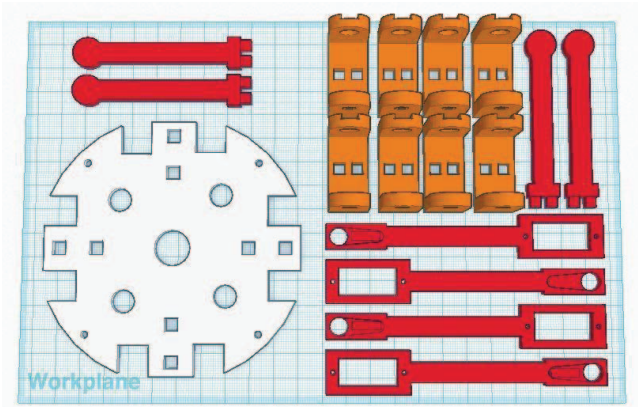

Figure 2. *Goon Quad* 3D Parts Design

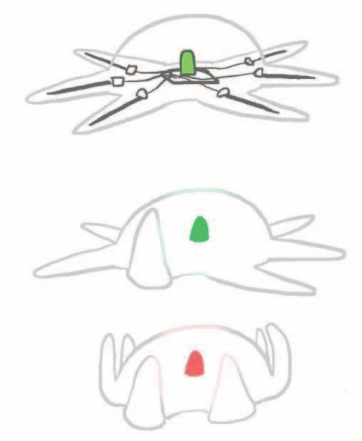

Figure 4. Early Design Concepts

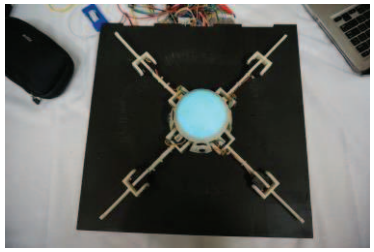

Figure 5. GoonQuad in sleeping state.

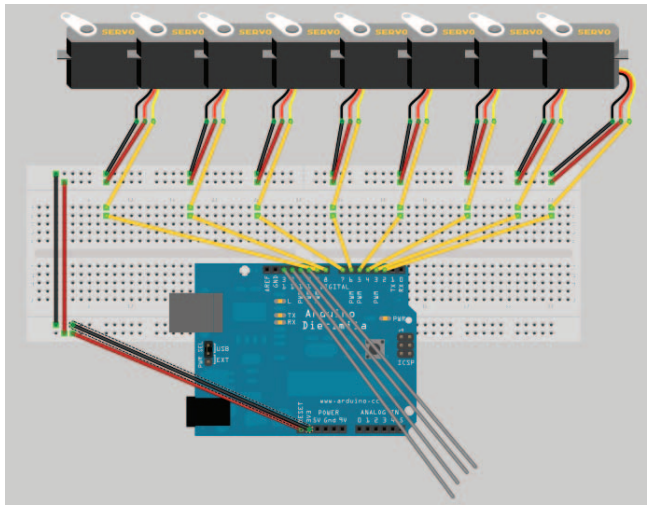

Figure 3. GoonQuad Servo Connection

2 servos in each of the robot's legs: one at the base and one at the joint. Using conductive ink we created capacitive sensors on the eyebrows and the tattoo of the robot. RGB LEDs were placed inside the robots dome. Our software solution encompasses a myriad of prerecord motions, ability to detect user input and well as recording and replaying direct user manipulation.

Apparatus

GoonQuad is a quadruped robot designed to resemble a spider. It feels smooth to touch and is capable of responding to user interaction both by moving its limbs as well as displaying distinct appearances, based on its current emotional state. Users can interact with it in two different manners: either by touching the capacitive sensors placed around its dome or through direct deformation of the robots legs. The robot is able to record these movements and replay them at any time. When the robot is not being interacted with, it will assume its baseline breathing behaviour. In addition to the embedded hardware, painted eyebrows and a tattoo serve as reference points as to where the touch sensors are placed. Touching these sensors, either individually or touching multiple regions simultaneously, will trigger distinct emotional responses. Examples include:

- *Poking*: will cause the robot to feel agitated and defensively curl up.
- *Covering both eyes*: will cause the robot to fall asleep.
- *Stroking:* will cause the robot to feel overjoyed and express these feelings through dance.
- *Simultaneous regions:* will cause the robot to display a confused behavior.

Each of these emotional reactions are associated with different lighting appearances. *Poking* is associated with a red appearance of the robots dome; *Covering both eyes* will result in absence of illumination, associated with sleep; *Stroking* will display a bright blue color; *Simultaneous regions* will cycle through the RGB color spectrum, displaying confusion. Moreover, GoonQuad limbs can record direct user manipulation and replay those motions back, simulating mimicry. Previous explorations often did not feature human touch detection nor support for recording direct user manipulation. Our aim is to fill that gap by leveraging interaction techniques one would observe while interacting with physical objects (i.e. a child interacting with a plush toy).

Discussion

People were excited about our experiment and our hypothesis that a friendly looking quadruped would facilitate human-robot interaction was verified. User comments suggested this was possible due to the support for human touch as opposed to pressing buttons or voice commands, as seen in previous explorations [[8],[11]. It is believed that there was an increased in levels of engagement and interaction with users due to the natural behaviour of our robot as well as its ability to replay users' manipulation, providing them with a sense of control and familiarity.

Conclusion

The GoonQuad is an interactive robot capable responding to human touch and expressing emotional behaviour. Our aim was to develop a system where users can interact with a robot naturally and the robot can adapt to this natural interaction. By enabling the record to record direct user manipulation, we were able to create a platform for expressing human-robot interaction. Our observations suggest that building robots capable of expressing an emotional congruence between semantic content and expressive movement is key for facilitating human-robot interaction.

References

[1] N. Frijda. Emotions Are Functional, Most of the Time in: P. Ekman & R. Davidson. *The nature of emotion*, 1994.

[2] L. Canamero and J. Fredslund. "I show you how I like you-can you read it in my face?" *Systems and Humans, IEEE Transactions* on, 31(5):454–459, 2001.

[3] C. Breazeal. *Designing sociable robots*, 2004.

[4] T. Fong, I. Nourbakhsh, and K. Dautenhahn. *A survey of socially interactive robots*. pp 1–24, 2003.

[5] O. Damm, K. Malchus, F. Hegel, P. Jaecks, P. Stenneken, B. Wrede. and M. Hielscher-Fastabend. A computational model of emotional alignment. In *5th Workshop on Emotion and Computing*, 2011, Berlin.

[6] H. Ahn, Y. Beak, I. Sa, and W. Kang. Design of reconfigurable heterogeneous modular architecture for service robots. *Intelligent Robots and Systems 2008. IROS 2008. IEEE/RSJ International Conference* on, pages 1313–1318, 2008.

[7] M. Scheeff, J. Pinto, K. Rahardja, and S. Snibbe. Experiences with Sparky, a social robot. *Socially Intelligent Agents*, pages 173–180, 2002.

[8] I. Lutkebohle, F. Hegel, S. Schulz, M. Hackel, B. Wrede, S. Wachsmuth, and G. Sagerer. The bielefeld anthropomorphic robot head "Flobi". In *Robotics and Automation (ICRA), 2010 IEEE International Conference* on, pages 3384–3391, 2010.

[9] McKenna, F.P. (1986). "Effects of unattended emotional stimuli on color-naming performance". *Curr.Psychol. Res.* Rev,. 5, 3-9.

[10] Kitayama, S. and Howard, S. (1994). "Affective regulation of perception and comprehension". In *Perception and Attention*, 41-65, New York: Academic Press.

[11] Mead, R. and Mataric, M. "The power of suggestion: Teaching sequences through assistive robot motions". *4th ACM/ IEEE International Conference on Human Robot Interaction* (HRI), San Diego, USA, 2009

[12] Arai, K., Inoue, Y., Kato, M., Itakura, S., Nakauchi, S. and Kitazaki, M. "Emotional incongruence of facial expression and voice tone investigated with event-related brain potentials of infants". Presented at *12th International Multisensory Research Forum*. Fukuoka, Japan, 2011.

[13] GoonQuad – An Emotive Quadruped - http://www.instructables.com/id/3D-Printed-Emotive-Quadruped/. Retrieved 6/10/2014